3TC-MAC
Playing with Ethernet and switches

Version _____: 1.5b
Date_____: 07 October 2019 (update: 10/2019, 10/2020, 05/2023, 06/2023, 06/2024, 06/2025, 05/2026)
Authors_____: Philippe Isorce, Sébastien Peychet, Fabrice Valois
(Thanks to Walid Bechkit, Guillaume Bono, Oana Iova, Frédéric Le Mouel and Razvan Stanica to improve the initial subject)

Read carefully whole the subject before to start!

0. Goal of the lab (4 hours)

To manipulate cables, to configure ports and switches, to monitor the Spanning Tree Protocol (without and with loops), to configure VLAN and verify the traffic isolation, to use the Trunk mode to export VLAN.

1. Introduction and review of the equipments of the lab

The ISO room, one of the two networking lab of the Telecommunications Department, is composed of 4 half-tables, each half-table is equipped with 4 computers. For each computer, there are 3 networking interfaces (top-down order in the back: `eth1`, `eth0`, `eth2`) such as:

- **`eth1`** is *only* used for administrative purpose, connected to the network 192.168.38.0/24. `eth1` is also used to access to Moodle.
- **`eth0`** and **`eth2`** are connected but non configured interfaces, they are ready-to-use interfaces, except for `eth2` which is not connected in ISO room.

Warning!
You are not allowed to disconnect `eth1`. *But, to avoid routing table conflict, it is recommended to disable this interface using* `ifconfig eth1 down.`

Warning (bis)!
Disable the (dynamic) networking services.

Configuration of the computers: you should boot on the Linux Ubuntu distribution, named `LIVE CD`. The username / password is: `root / linadm`. You are now connected as the super-user `Root`.

Configuration of the lab: each computer is identified by a unique name: `tp-iso-xx`$_{(1 \leq xx \leq 32)}$ for the ISO room[1]. Each half-table is also identified by a unique color code. In the back of the classroom, there are a network bay (on the left) and a switches bay (on the right). All the computer's interfaces (`eth0`, `eth1`, `eth2`) are connected to the network bay.

→ You should use the switch which have the same color code as your half-table!
→ To connect a computer, please use the correspondence table in the front of the bays and use only ethernet cables of the same color code!

Default switch configurations (theory…): each switch has 24 ports. Two independent VLANs are configured: port 1 to port 12 are for VLAN1 whereas port 13 to port 23 are for VLAN2. The port 24 is dedicated to monitor all the traffic from port 1 to port 23 (port 24 is a *received-only* port).

General information: at midterm (*i.e.* in 2 hours), you should finished section 3.

General warning: for section 2 & section 3, use the default switch configuration without modification.



Never use the commande `write` on the switches!

For any command you use, a help is available using `commandName -h` or `man commandName`.

[1] `tp-rezo-xx`$_{(1 \leq xx \leq 24)}$ for the REZO room, located at the 1st floor of the Telecommunications Building.

2. Be connected to a switch (and some basic commands).

To configure a switch and the ports:

1. using the patch bay, you need to connect your PC to the switch with the console cable (light blue): the RJ45 to connect the switch, and the DB9 to the PC;
2. use `putty` (or `minicom`) to be connected on the switch thanks to the serial interface.

To enter into the configuration mode:

```
Switch>enable
Switch#
```

To get the help menu:

```
Switch#?
```

To leave the configuration mode:

```
Switch#logout
```

3. Switch and ports configuration.

Vocabulary: `Ethernet`: 10Mbit/s — `fastEthernet`: 100Mbit/s — `gigabitEthernet`: 1Gbit/s
The ports are named using the module number/port number such as: 0/1 or 1/0/1 depending of the switch.

3.1. Current configuration

To obtain a summary of the status of all the ports, use the following command:

```
Switch#show interfaces status
```

Identify all the ports and their uses. Especially, we use a switch with 24 ports but more ports are listed: where these ports are located on the switch? Which use(s) for these ports? What is a 'routed' port? What is the difference between 1000BaseTX and 1000 BaseSX?

To show the configuration of a given port:

```
Switch#show interfaces gigabitEthernet 0/10[2]
(Gi1/0/10 is also accepted)
(or gigabitEthernet 1/0/10 for some switches)
```

What are the key information provided? Why this interface is currently down? What is the objective of the `Line Protocol`?

On a second computer, use the command:

```
$> ethtool eth0 (or eth2)
```

Which information do you get? Now, connect this computer to the switch: which information are updated? Observe the latency needed before the port is available. In your opinion, which information are exchanged during this auto-configuration mechanism?

To verify the MTU configuration of the interfaces:

```
Switch# show system mtu
```

3.2 Rate configuration

You can modify the rate of any ports. By default, the rate of the `fastEthernet` interface is 100Mbit/s, but you can limit this rate:

```
Switch>enable
```

[2] Example.

```
Switch#configure terminal
Switch#interface gigabitEthernet 0/1
Switch(config-if)#speed 10
Switch(config-if)#end
```

Using `ethtool`, check the physical data rate on the computer connected to the switch. Change the rate of the port used. What is now the rate used by the computer?

3.3 Active ports and MAC addresses

Connect two workstations on VLAN1. Describe the mechanism used by the switch to identify the ports of the workstations.
Using the following command, you can list the MAC addresses which are connected to the switch:

```
Switch#show mac address-table dynamic
```

Connect a new computer on the switch to observe a change in this table. What is the use of this table?

4. Spanning Tree Protocol

On a computer, use `wireshark` to monitor the trafic on a network interface. Filter the trafic to observe only the STP protocol.

4.1. Observe the control packet exchange

Do you observe periodic control packets? From a particular switch?
Do you observe several type of packets used by STP?
Study the header using `wireshark`. Typically, three MAC addresses are used. Why?
Explain what is the bridge.

4.2. Connect 2 (and more) switches!

Using a cross-over cable, connect two switches which have the same data rate. Observe the STP protocol, especially the TC (`Topology Change`) packet. Check the header, the `Cost` field, and verify the convergence time.
Now, connect a third switch but with a different data rate. What do you observe? Explain.

4.3 Spanning tree configuration

To show the configuration of the spanning tree:

```
Switch#show spanning-tree
```

Explain the different states of the ports (`Root, Des, Altn`) and verify the status.

4.4. Observe a loop

Using a cross-over cable (brown or grey color), create a physical loop on your switch.
Observe the spanning tree protocol thanks to `wireshark`. What are the states of the different ports of the switch? Observe the convergence time of the STP when a change occurs. Is there any indication in the controls packets that a loop was detected?

4.5 Port fast option

Remove the physical loop previously created. To reduce the latency for a port to be enabled, you can use the port fast option in the spanning tree configuration:

```
Switch#configure terminal
Switch(config)#spanning-tree portfast default
```

What happen using this command?
Create physical loop in your switch and observe STP in `wireshark`. Discuss the tradeoff between the latency and the topology change (especially in a case of loops).

5. Port-based VLAN configuration

5.1. Default configuration and basic commands

First, to check the current configuration of the VLAN of your switch, use the command:

```
Switch# show vlan id <vlan-id>
```

What is a native VLAN?

Connect two computers on the VLAN1 on your switch using `eth0`[3]. Then, configure the IP addresses. Using the `ping` command, verify that `computer1` is reachable from `computer2`, and vice-versa.

For the static-based VLAN, list the MAC addresses which are actives in the network:

```
Switch>show mac address-table dynamic
```

Or list the MAC addresses associated to a given port:

```
Switch>show mac address-table interface Gi0/10
```

5.2. Create and configure a port-based VLAN

To create and to configure a VLAN in a switch:

```
Switch# configure terminal
Switch(config)# vlan <vlan-id>
Switch(config-vlan)# name <vlan-name>
Switch (config-van)# end
```

Where:

`<vlan-id>` is a number
`<vlan-name>` is a canonical name.

To show your configuration:

```
Switch# show vlan name <vlan-name> | id <vlan-id>
```

Now, to verify the flow isolation provided by the VLAN, modify the configuration of your switch to move one computer to VLAN2, while continuing to ping. What do you observe? Go back to your initial port/VLAN configuration.

To delete a VLAN:

```
Switch(config)# no vlan <vlan-id>
```

5.3. To affect a switch port to a given VLAN

To associate a port to a switch, a port should be in `access mode`.

```
Switch# configure terminal
Switch(config)# interface <interface-id>
Switch(config-if)# switchport mode access
Switch(config-if)# switchport access vlan <vlan-id>
Switch(config-if)# end
```

Where:

`<interface-id>` is an interface, e.g. gigabitEthernet 0/1
in case of a list of ports: `interface range gigabitEthernet0/5 - /8`

To show your configuration:

```
Switch# show running-config interface <interface-id>
Switch# show interfaces <interface-id> switchport
```

[3] Remember your IP labs: you should disable the (dynamic) networking services.

```
Switch# show vlan brief
```

Note that a new MAC address is created and associated to your VLAN.

6. Use the `trunk` mode to connect switches

Now, consider a configuration of two switches, where two VLANs are configured (`VLAN1`, `VLAN2`). There are only two workstations per VLAN of each switch. Each `VLANi` has its specific addressing scheme. Verify the connectivity inside each VLAN, verify also the traffic isolation between `VLAN1` and `VLAN2`.

Now connect the two switches using a cross-over cable between the two `VLAN1` (use only `VLAN1`). Are you able to ping all the workstations which belong to the `VLAN1`? Same question for the workstations of the `VLAN2`.

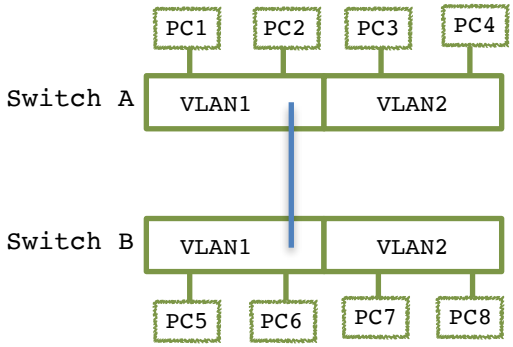

To allow workstations of the `VLAN2/Switch A` to ping the workstations of the `VLAN2/Switch B`, you should enable the `trunk mode`. For the two interfaces used to connect the two switches:

```
Switch# configure terminal
Switch(config)# interface interfaceName
Switch(config)# switchport mode trunk
Switch(config)# end
```

Now, verify that, inside the `VLAN2`, all the workstations are reachable. Same for `VLAN1`.

7. Observe the 802.1Q header

802.1Q protocol inserts a short header in the Ethernet frame: remind the information provided and the goal of 802.1Q.
Explain why this header is never observable from a computer directly connected to a switch.

In order to monitor this header, we use the monitoring port (i.e., port #24) using the `encapsulation replicate` mode:

```
Switch# configure terminal
Switch(config)# monitor session 1 source interface gigabitEthernet 0/1 - 23
Switch(config)# monitor session 1 destination interface gigabitEthernet 0/24
encapsulation replicate
```

Now, ping `PC5` from `PC1`. What do you observe in the monitoring port?
Now, ping `PC7` from `PC3`. What do you observe in the monitoring port? Study the header of 802.1Q.